USER MANUAL

Model: **PRO M2**

Tips: Please read this manual carefully before use and keep it properly.
Do not ride until you know the performance of this product.

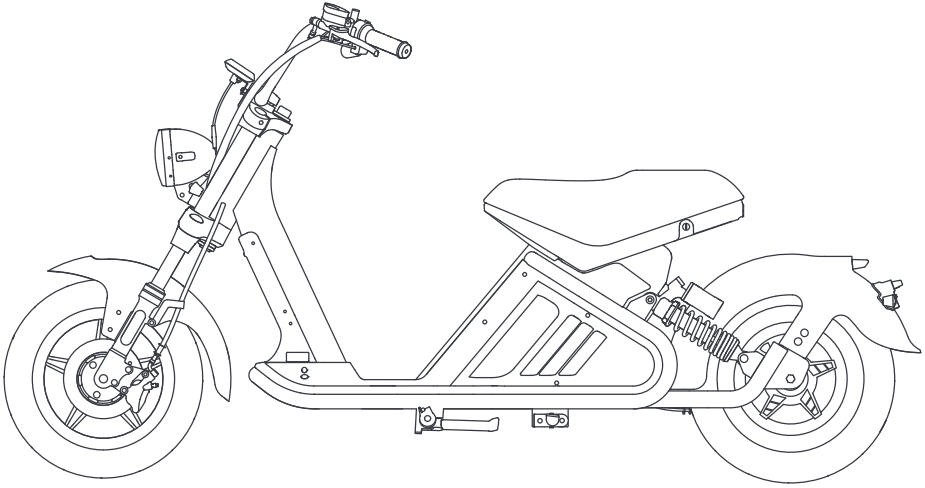

2.Products and accessories

Carton：

Accessories

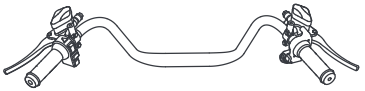

Handlebar×1



Display×1



Pedal×2



Rear view mirror×2



Allen×4

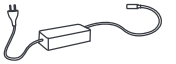

Charger×1

Accessories

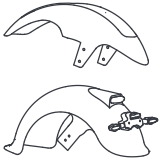

Front and rear fenders×1



Front wheel×1

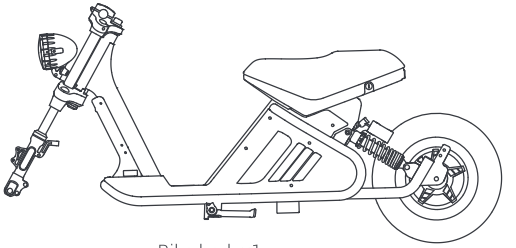

Bike body×1

User information

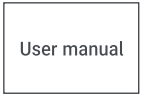

User manual×1



Warranty×1



Certification×1

Please carefully check whether the items in the packaging box are complete and in fact of any missing or broken items.

3.Function diagram

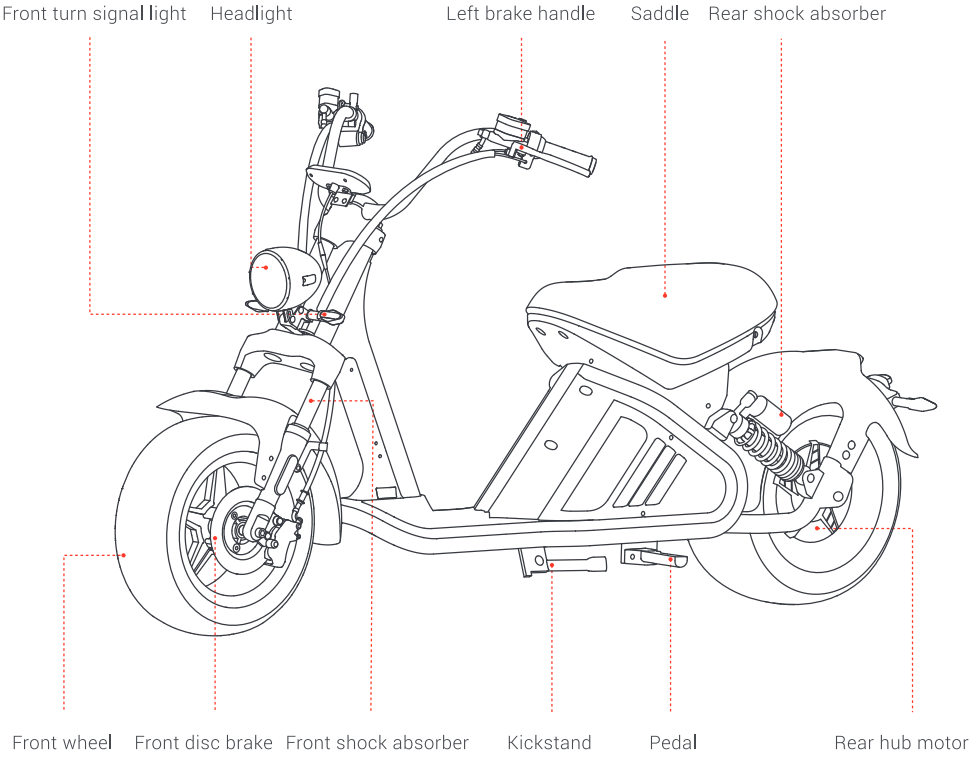

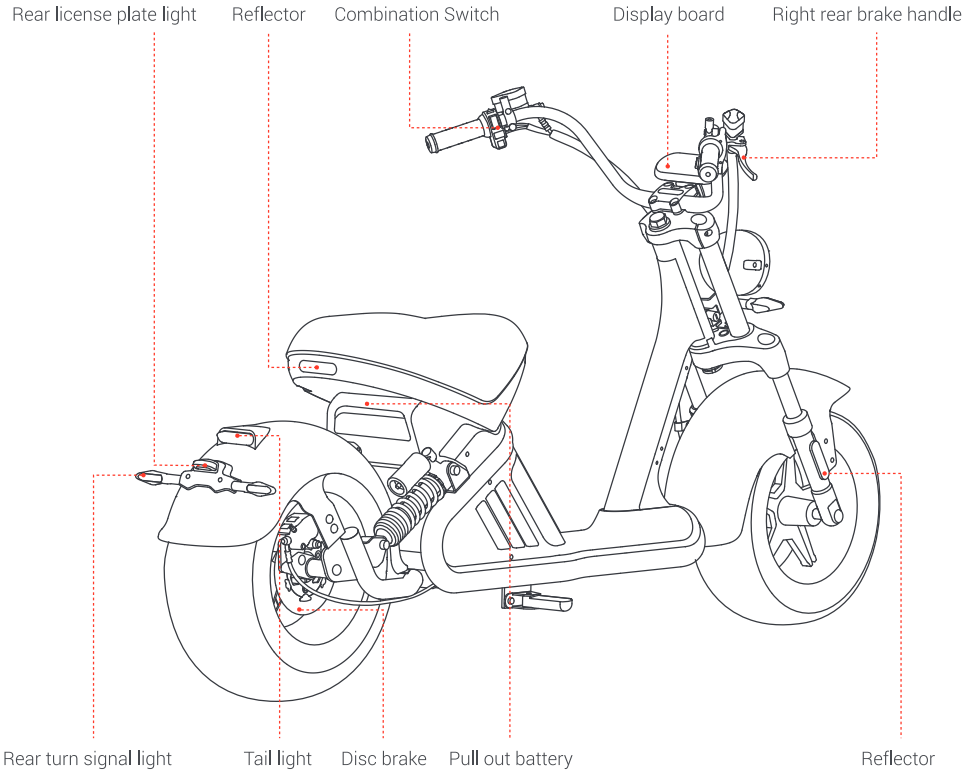
Rear license plate light
Reflector
Combination Switch
Display board
Right rear brake handle
Rear turn signal light
Tail light
Disc brake
Pull out battery
Reflector

Display

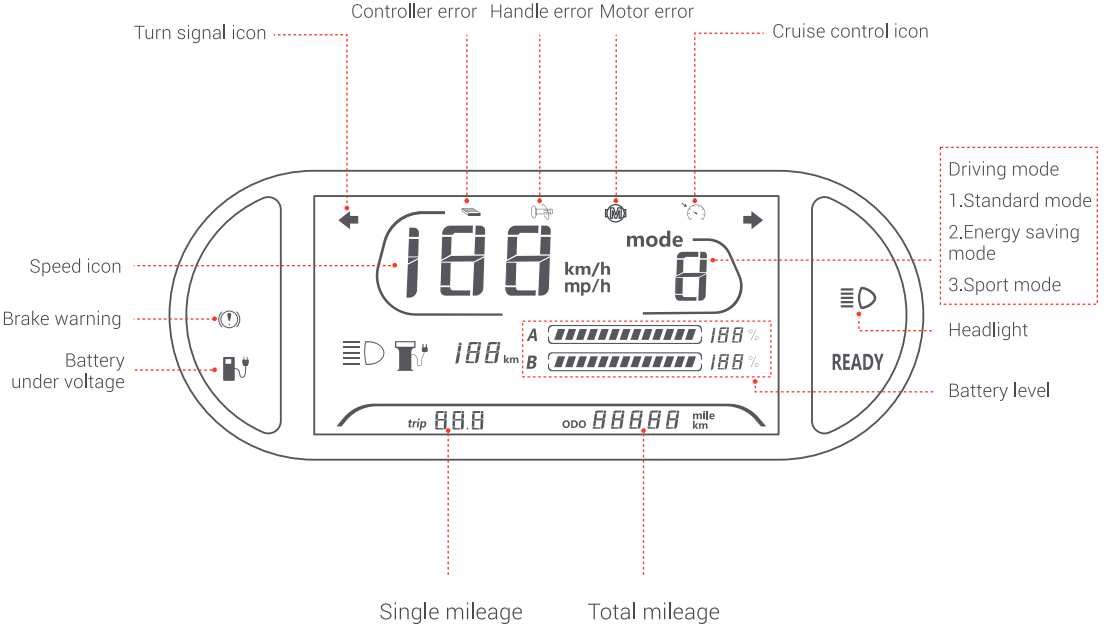
Controller error
Handle error
Motor error
Turn signal icon
Cruise control icon
Driving mode
1.Standard mode
2.Energy saving mode
3.Sport mode
Speed icon
Brake warning
Battery under voltage
Headlight
Battery level
mode
km/h
mp/h
A
B
READY
trip
ODO
mile
km
Single mileage
Total mileage

Head combination switch

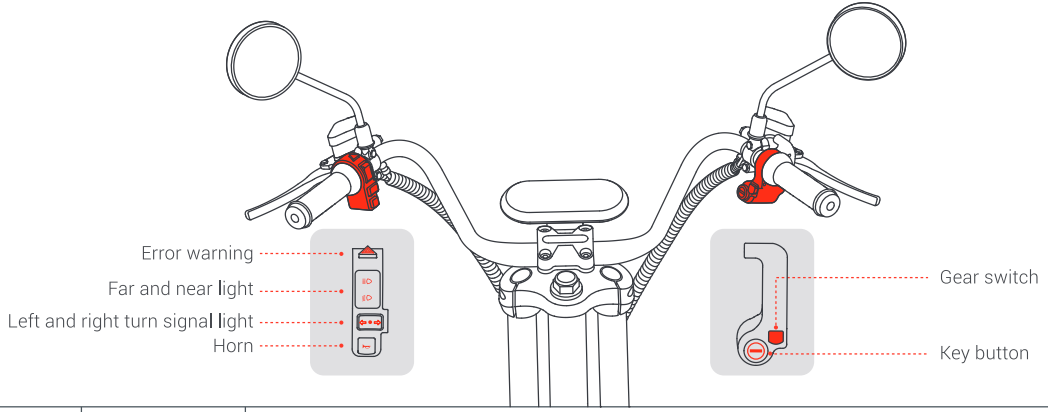

	Gear switch	After pressing the 1 button in turn, quickly switch the driving mode (1/2/3 gear), thereby changing the driving speed threshold.
	Error warning	When the electric motorcycle meets some errors, you can press the 1 button, and the left and right turn signals will always flash double.
	Far and near light	Press the 1 button up to turn on the near light; Press the 1 button down to turn on the far light.
	Left and right turn signal light	Press left to turn on the left turn signal light; press right to turn on the right turn signal light.
	horn	Short press the horn button, the horn will sound

4.How to assembly

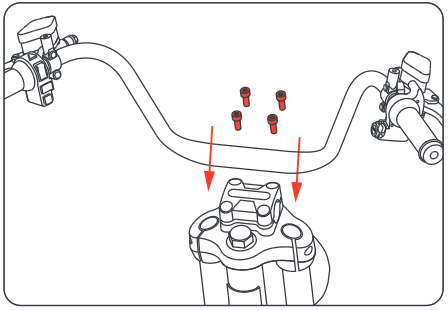

1.To fix the front of the car, first unscrew the screws on the card slot, and place the handlebar kit corresponding to the card slot. (Note: Do not remove the cable tie on the brake lever first)

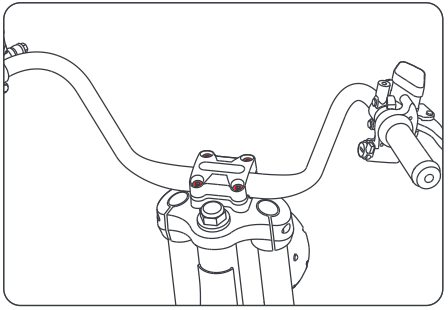

2. Secure the handlebar kit, use a screwdriver to tighten the screws diagonally, and the installation is complete. (Note: After installation, remove the cable tie on the brake lever)

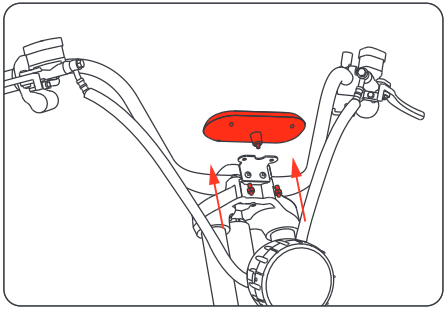

3. To install the display, first unscrew the screws on the sheet metal.

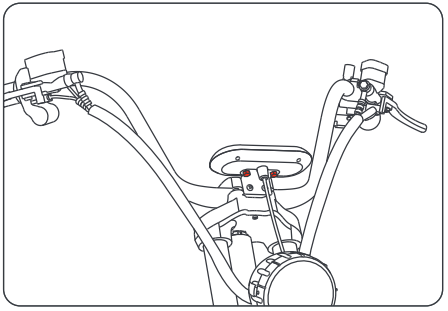

4. Match the display screen to the hole position of the sheet metal, and tighten the screws from bottom to top.

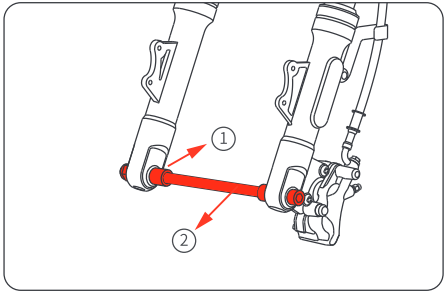

5. To install the connecting rod, first place the bushing ① corresponding to the inner hole of the front shock absorber, then install the connecting rod ② through the bushing and the front shock absorption hole position, and fix the right front shock absorption hole with screws first.

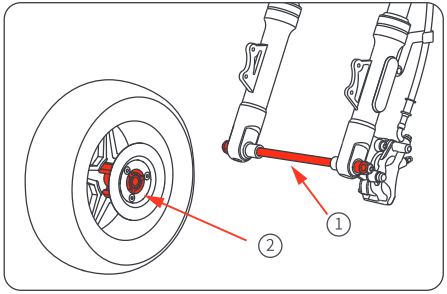

6. Install the front wheel, the connecting rod ① passes through the front wheel shaft ② and corresponds to the left front shock absorber hole, and fix it with screws.

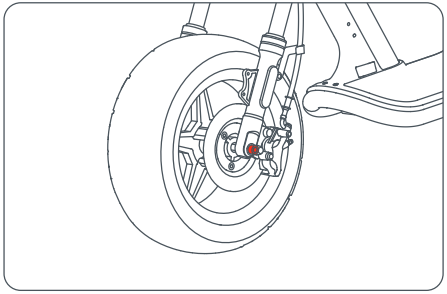

7. Put the wheel straight, check the gap between the brake disc and the caliper, otherwise it will cause the disc to rub. After installation, tighten the nuts on both sides.

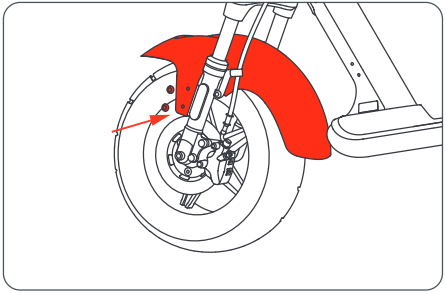

8. Install the front fender and fix it with screws on both sides of the front shock absorber.

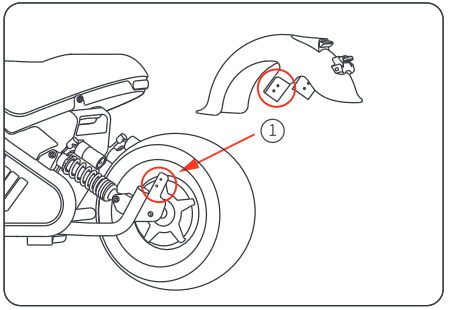

9. Install the rear fender, the mounting hole position of the fender ①: The side screws are fixed on the rear fork welding piece.

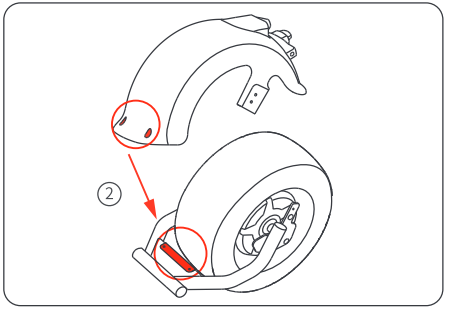

10. Install the rear fender, fender installation hole ②: The front screw is fixed on the rear fork sheet metal.

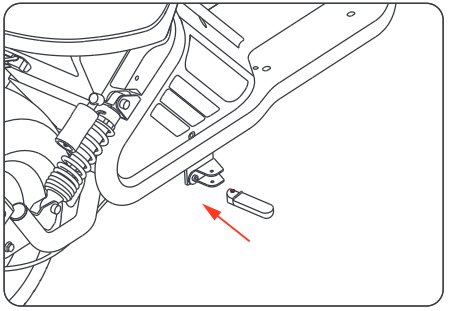

11. Install the pedals on both sides of the body and fix them with screws.

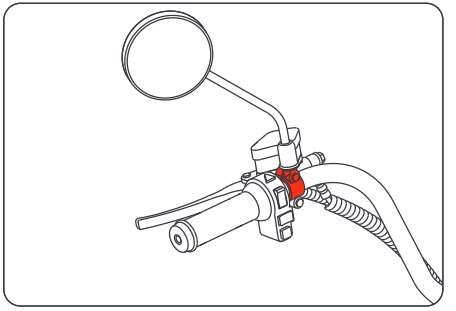

12. Install the rear view mirror.

5.Check before riding

To reduce the occurrence of accidental injuries, the following items should be checked before each ride:

1. Check bike status, tire and brake effect, etc. Ensure that no parts including the handlebars, risers, tires, brake lines, brake handles, fenders, and screws show any signs of loosening or damage.

2. When the power is low, the electric motorcycle does not have enough power to maintain normal cycling. Please make sure that the power is sufficient to avoid danger.

3. Must wear a helmet and a full set of knee pads, wrist pads, elbow pads, wear sports shoes, and wear clothes suitable for sports. Long hair or enough to affect the line of sight bangs, broken hair should be tied up, so as not to block the line of sight affect normal riding.

4. For your first ride, please do not choose the areas where children, pedestrians, pets, vehicles or other obstacles and potential hazards may occur.

Note: If there are any abnormal signs, please stop using it immediately and contact the after-sales service for testing guidance.

6 Learn to drive

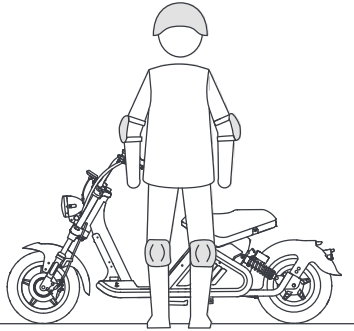

1. Preparation:There is a risk of falling and injury, so wear a helmet and protective gear all the time.

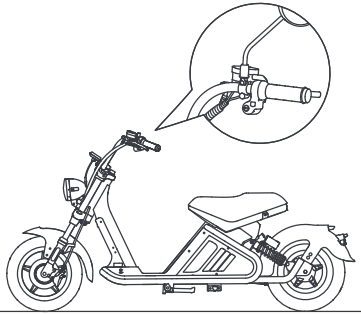

2. Power on: Turn the key to the right to power on, turn the headlight twice to turn on; and check the battery indicator. If the battery is too low, please charge it immediately.

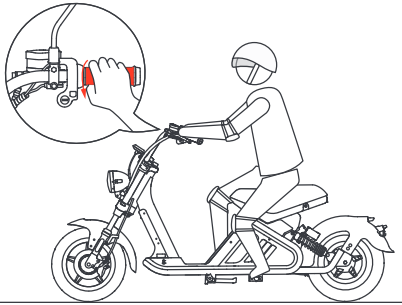

3. Start: Straighten the body before driving, adjust the sitting position, and after confirming that the gear is in low speed, slowly turn the throttle knob downward, and slide your feet on the ground; after the vehicle runs smoothly, retract your feet and place them on the pedals.

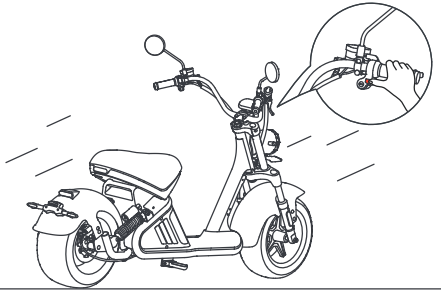

4. Acceleration mode switching: The shift button can perform 1 to 3 gear shifting.

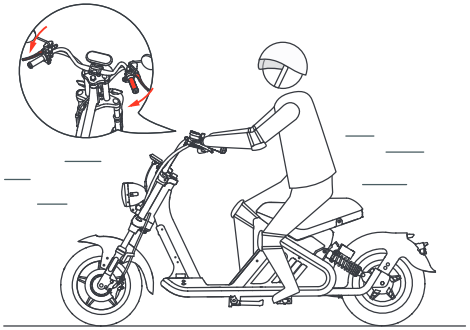

5.Deceleration/Brake: Release the throttle lever to slow down. Emergency braking requires a quick press on the brake lever.

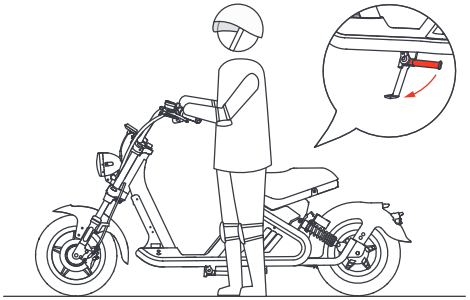

6. Get off: After the ride, please park the electric bicycle on a flat road and press and hold the power on/off to turn off the power; put down the foot support to avoid rolling or tipping the electric motorcycle.

Warning: When braking sharply, you may fall due to the lack of tire grip, causing serious injury.Please maintain appropriate speed and observe the road conditions to minimize potential risks.

7.How to charge

Due to the self consumption of the battery during transportation and storage, it is normal the low or no power for the first time. Please follow the charging steps below. Do not allow child to operate the charging equipment.

Charging: battery extraction charging/body charging

Find the battery under the seat cushion, unlock the seat with the key first, rotate the seat upwards and then extract the battery. The output end of the charger is connected to the body charging port, and then the power is turned on.

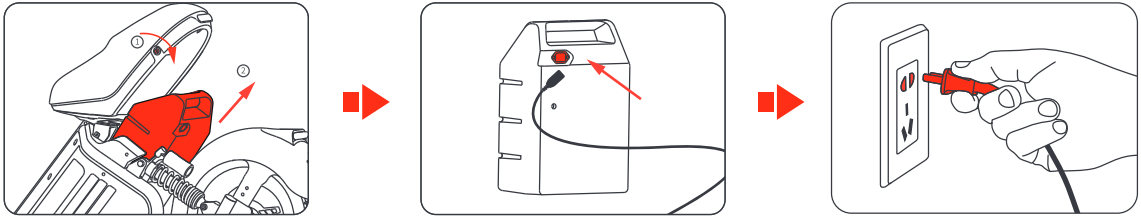

*The red light of the charger is always on to indicate that it is charging, and the green light is always on when charging is complete. Please power off in time when the battery is fully charged.

⚠ Warning

1. Please charge when the bike power off.

2. Please use the original charger and only use the charger designated or approved by the supplier, otherwise the battery may be damaged or ignited.

3. Do not charge when the charging port, power socket or charging line is wet. If the vehicle is flooded, the battery is damaged or flooded, it is prohibited to charge or continue to use the battery.

4. In the process of charging, if the indicator light is abnormal or there is abnormal smell, stop charging immediately and contact the after-sales service or replace the charger.

5. The charger shall be kept away from inflammables and explosives when working. The charger is not a toy. Please place it in a safe place where child cannot touch.

6. Disconnect the power immediately after charging. Do not connect the charger to the power supply for a long time when it is not charged.

7. It is necessary to regularly check whether the charger wires, plugs, housings and other parts are damaged. In case of damage, it shall be stopped use until it is repaired or replaced.

8.Product specifications

Model	Motor-02
Colour	Red or black color
Maximum battery capacity	60V 20Ah/30Ah/40Ah
Maximum range	80km
Motor	60V 1500W/2000W
Tire	12 inches
Standard working voltage	60V
Battery Type	Lithium battery
Brake	Front and rear oil brake
Rated maximum load	200Kg
Lights	Front and rear lights (functions include low beam, high beam, turn signal)
Net weight	81kg
Gross weight	92kg
Expanded size	2100*680*1105mm(L*W*H))
Storage temperature	0°C~35°C
Charging temperature	10~35°C

You can choose the appropriate version according to your own needs.Motor-02 will launch various optional upgrade accessories and color style kits in the future. For details, please consult your dealer.

9.Daily maintenance

Users should follow the following tips to maintain and maintain electric bicycles:

Clean

Wipe the main frame clean with a soft damp cloth. For hard-to-clean stains, use a professional cleaner to scrub repeatedly, then clean with a soft damp cloth.

Note: Do not use alcohol, gasoline, kerosene or other corrosive and volatile solvents to clean. These substances may damage the exterior and interior structure of the vehicle body.

⚠ Warning

• Do not use pressure water guns or hose sprays for flushing.

• During the cleaning process, keep the electric bicycle turned off, unplug the charging cable and fasten the rubber cover of the charging port, otherwise it may cause electric shock or serious failure due to internal water.

Storage

When not in use, try to store it in a dry and cool place indoors, and try to avoid storing it outdoors for a long time. Sun exposure/hot/cold outdoor conditions will accelerate the aging of the appearance and tires and reduce the service life of the body and its battery pack. Before storing, please fully charge the electric bicycle, if it is not used for a long time, please charge it regularly to prevent the battery from discharging. Do not store it in a dusty environment to avoid damage to electrical components. Can not be stored together with chemicals, acids, alkalis and other substances.

⚠ Warning Do not go near the fire source!

Move

Before moving, make sure that the electric bicycle is turned off. During the handling process, please handle with care, do not throw, heavy pressure, rain, moisture andviolent collision are strictly prohibited.

Battery Maintenance and Recycling

A well-maintained battery will keep running well even after many miles of driving. Generally speaking, a fully charged battery will use up its stored power in120-180 days after it is turned off. If it is not used for a long time, it should be charged every 30-60days. Charge the battery after each drive. A completely depleted battery may cause permanent damage. There is a smart chip inside the battery to record the charge and discharge of the battery. Damage due to over charging or undercharging is not covered under warranty.

• Do not remove or disassemble the battery.

• Do not use other types or brands of battery packs, otherwise there may be safety risks.

• It is for bidden to charge in areas that are prohibited by the laws of the country/region and relevant management units.

• Do not touch the battery contacts anddo notopen orpuncture the case. Avoidmetal objects touching the battery contacts tocause a short circuit,otherwise it may causebattery damageor personal injury.

• Do not throw the battery pack into a fire, otherwise it may cause the battery to fail, overheat, or even risk a fire.

• When storing or charging the battery, do not exceed the specifiedtemperature limits (see "Product Specifications").

• Improper disposal of used batteries can seriously pollute the environment. Waste batteries cannot be dismantled without authorization, and should be recycled by relevant professional departments. Please comply with local regulations and do not discard the battery pack arbitrarily to protect the natural environment.

Charger

• Chargers should be used exclusively for vehicles, and it is strictly forbidden to charge non-rechargeable batteries.

• Confirm whether the connected power is 110V-220V AC power.

• If you find damaged lines or loose connectors, do not use them, please contact the after-sales service or designated authorized service.

• When charging, the vehicle should be in a safe place, beware of rain and sun exposure.

• When charging, insert the vehicle's charging port first, then the charger's power plug.

• During the charging process, if the indicator light is abnormal, there is a strange smell or the charger case is overheated, the charging should be cut off immediately.

• After the battery is fully charged, unplug the charger first, and then unplug the charger.

• After the charger has cooled down, tidy up the power cord and charging cable and place them in a safe place.

Other

• When the brake cable is loose or the brake is not sensitive, the brake cable screw can be adjusted.

• The external cord of the charger cannot be replaced. If the cord is damaged, please replace the charger in time.

• Tire repairs should be performed by professional service personnel.

Self Maintenance Guide

1.The first maintenance shall be carried out 1000 km after delivery of the new bikeor 3 months after delivery (which ever comes first).

2. After the first warranty, it is recommended to maintain once every 2000 km or 6 months (whichever comes first).

Specific maintenance rules and items and requirements

Maintenance project	Maintenance time (month)	3	9	15	21	27	33
	Maintenance mileage (km)	1000	3000	5000	7000	9000	9000
Adjust or replace front and rear brakes		A	A/R	A	A/R	A	A/R
Check handlebar steering		C	C	C	C	C	C
Check the tire pressure		C	C	C	C	C	C
Check the disc brake system		C	C	C	C	C	C
Tighten main component		T	T	T	T	T	T
Lubrication of main parts		L	L	L	L	L	L
Front and rear shock absorption adjustment		A	A	A	A	A	A
Check Light system		C	C	C	C	C	C
A: Adjust C: Check L: Lubricate T: Tighten R: Replace							

10.Warranty service

1. Warranty parts

Type	Warranty parts	Time
Body frame	Frame	2 year
Spare parts	Battery, motor, controller, charger	1 year
Appearance delicate parts	Handles, front and rear fenders, seat pads, brake pads	3 months

2. Non-warranty provision

1. Unauthorized maintenance, misuse, collision, negligence, abuse, liquid entry, accident, change, incorrect use of accessories other than this product, or tear, change or anti-counterfeit labels;
2. The warranty period has expired;
3. Damage caused by force majeure;
4. It does not meet the conditions of performance failure listed in the following "Electric motorcycle Performance Error Sheet";
5. Failure to use, maintain and adjust in accordance with the requirements in the "Instruction Manual" will lead to performance failure of e-bike;
6. Damage caused by human causes (including but not limited to punctured tires, collisions, marks and damage caused by normal use of appearance delicate parts, etc.);
7. Failure and damage caused by abnormal use of the product (including but not limited to overload, stepping down, falling, extreme sports, etc.);
8. If the Product is used for commercial purposes, there is no warranty.

3.Electric motorcycle Performance Error Sheet

Product	Performance Error
Electric motorcycle	1. The motor can't work during normal use; 3. The charger error during normal use; 2. The controller is faulty during normal use; 4. The battery is error during normal use;